NRW Twist-Off 0.500



KMC GLASS

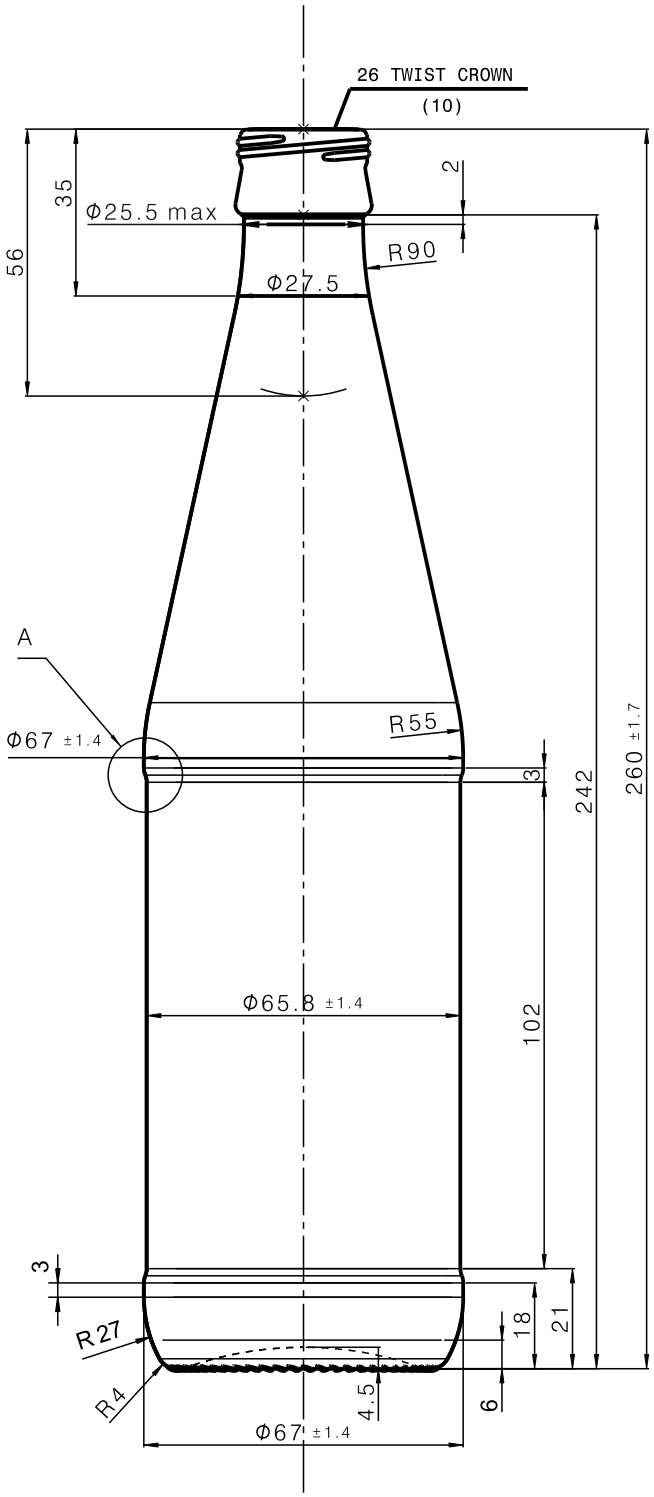

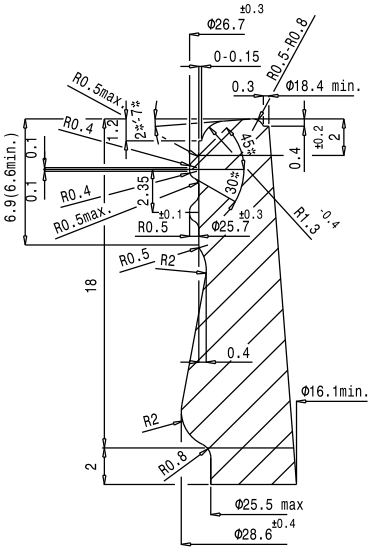

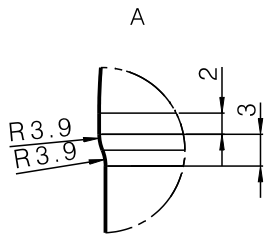

- NRW Twist-Off - 0.500
- Weight - 285
- Filling CAP - 500 ml
- Color - Amber; Green
- Diameter - 67 ± 1.4
- Entrance bore diameter - 18.4

www.kmc.glass
sales@kmc.glass

KMC GLASS